Hans Turck GmbH & Co. KG
Witzlebenstr. 7 | 45472 Mülheim an der Ruhr, Germany
T +49 208 4952-0 | F +49 208 4952-264

Company / customer	
Project description	
Drawing number	ID 100003117; EG-VA465526/112-0100/2GD60
Commission	

Manufacturer (company)	Hans Turck GmbH & Co. KG	Manufacturer (company)	
		Path	
Path			
Project name	ID 100003117_V2	Protection class	
Make		Power supply	
Type		Supply line	
Place of installation		Control voltage	
Responsible for project	Hans Turck GmbH & Co. KG		
Part feature		Year of manufacture	

Created on	26.10.2018				
Edit date	04.01.2021	by (short name)	Bast	Number of pages	9

INDEX

FACILITY	PAGE	PAGE DESCRIPTION	MODIFIED DATE	EDITED BY
+EXCOM_RIO				
	1	Cover Sheet	04.01.2021	Claus.Vogel
	2	Index	04.01.2021	Claus.Vogel
	3	Parts List	04.01.2021	Claus.Vogel
	4	GA	04.01.2021	Claus.Vogel
	5	GA Flange Plate	04.01.2021	Claus.Vogel
	6	GA Mounting	04.01.2021	Claus.Vogel
	7	Ground Wiring	04.01.2021	Claus.Vogel
	8	Incomer Supply Distribution	04.01.2021	Claus.Vogel
	9	MT PWR Wiring	04.01.2021	Claus.Vogel

Parts list

SR. NO.	DEVICE TAG	QTY.	PART DESCRIPTION	MANUFACTURER	PART NUMBER	TYPE NUMBER
1	-A1	1	Modexfilter	BARTEC GmbH	BAR.07-7311-93G5/8R20	07-7311-93G5/8R20
2	-CABINET_BASE	1	Mounting base for Cabinet 465526	ROSE Systemtechnik GmbH	ROSE.1630185	1630185
3	-CABINET_DOOR	1	Door with Window for Cabinet 465526	ROSE Systemtechnik GmbH	ROSE.1630187	1630187
4	-FLANGE	1	Flange for ROSE cabinet 460x550x260	ROSE Systemtechnik GmbH	ROSE.FLANGE_46XX26_1X2_V2	FLANGE_46XX26_1X2_V2
5	-FLANGE_BREATHER	1	M20 Breather/Drainer with stainless steel castled nut	Redapt	RED.DP-E-4-0-04-S3	DP-E-4-0-04-S3
6	-FLANGE_GLAND_M20_BU	70	PU Gland Ex-e Blue M20	WISKA Hoppmann GmbH	WISKA.ESKE/1-i 20	ESKE/1-i 20
7	-FLANGE_GLAND_M25_BK	4	PU Gland Ex-e Black M25	WISKA Hoppmann GmbH	WISKA.ESKE/1-e 25	ESKE/1-e 25
8	-MT	1	Remote I/O System excom® Module rack, zone 1, for 8 modules	Hans Turck GmbH	TUR.9100684	MT08-2G
9	-X	2	End clamp	Phoenix Contact	PXC.3022276	CLIPFIX 35-5
10	-X1	1	Feed-through terminal block	Phoenix Contact	PXC.3044160	UT 10
11	-X1	1	Feed-through terminal block	Phoenix Contact	PXC.3044188	UT 10 BU
12	-X1	1	Ground modular terminal block	Phoenix Contact	PXC.3044173	UT 10-PE
13	-X1	1	End clamp	Phoenix Contact	PXC.3022276	CLIPFIX 35-5

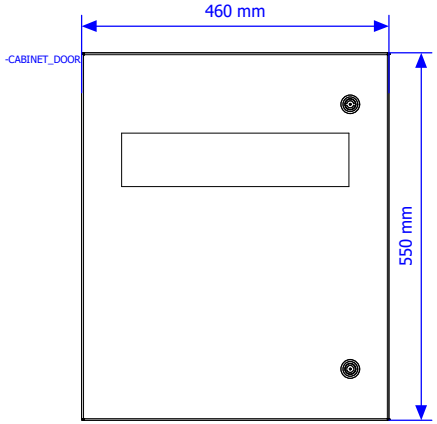

DOOR VIEW

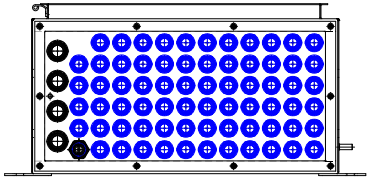

FLANGE VIEW

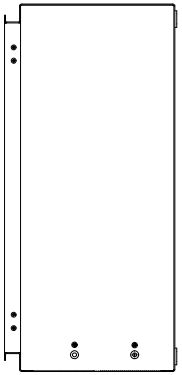

LEFT VIEW

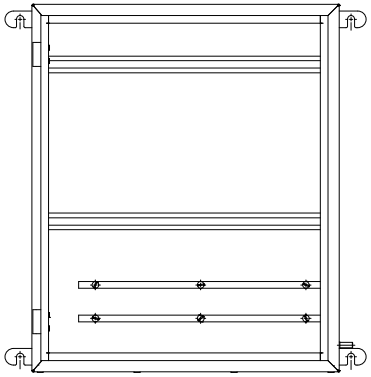

MOUTING VIEW

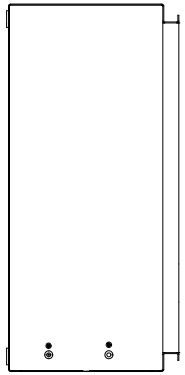

RIGHT VIEW

			Date	30.11.2020		
			Ed.	Bast		
			Appr			
Modification	Date	Name	Original		Replacement of	Replaced by

TURCK

GA

=

+ EXCOM_RIO

ID 100003117; EG-VA465526/112-0100/2GD60

Page 4

Page 9

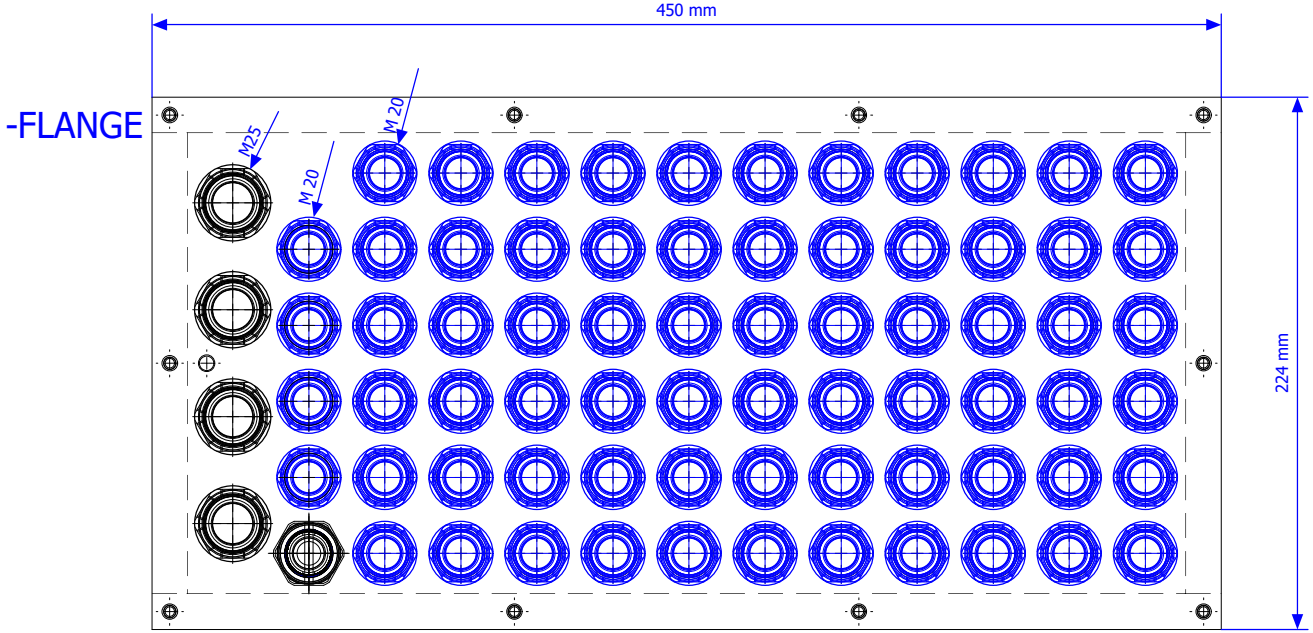

			Date	30.11.2020		
			Ed.	Bast		
			Appr			
Modification	Date	Name	Original		Replacement of	Replaced by

GA Flange Plate

=
+ EXCOM_RIO

ID 100003117; EG-VA465526/112-0100/2GD60

Page 5
Page 9

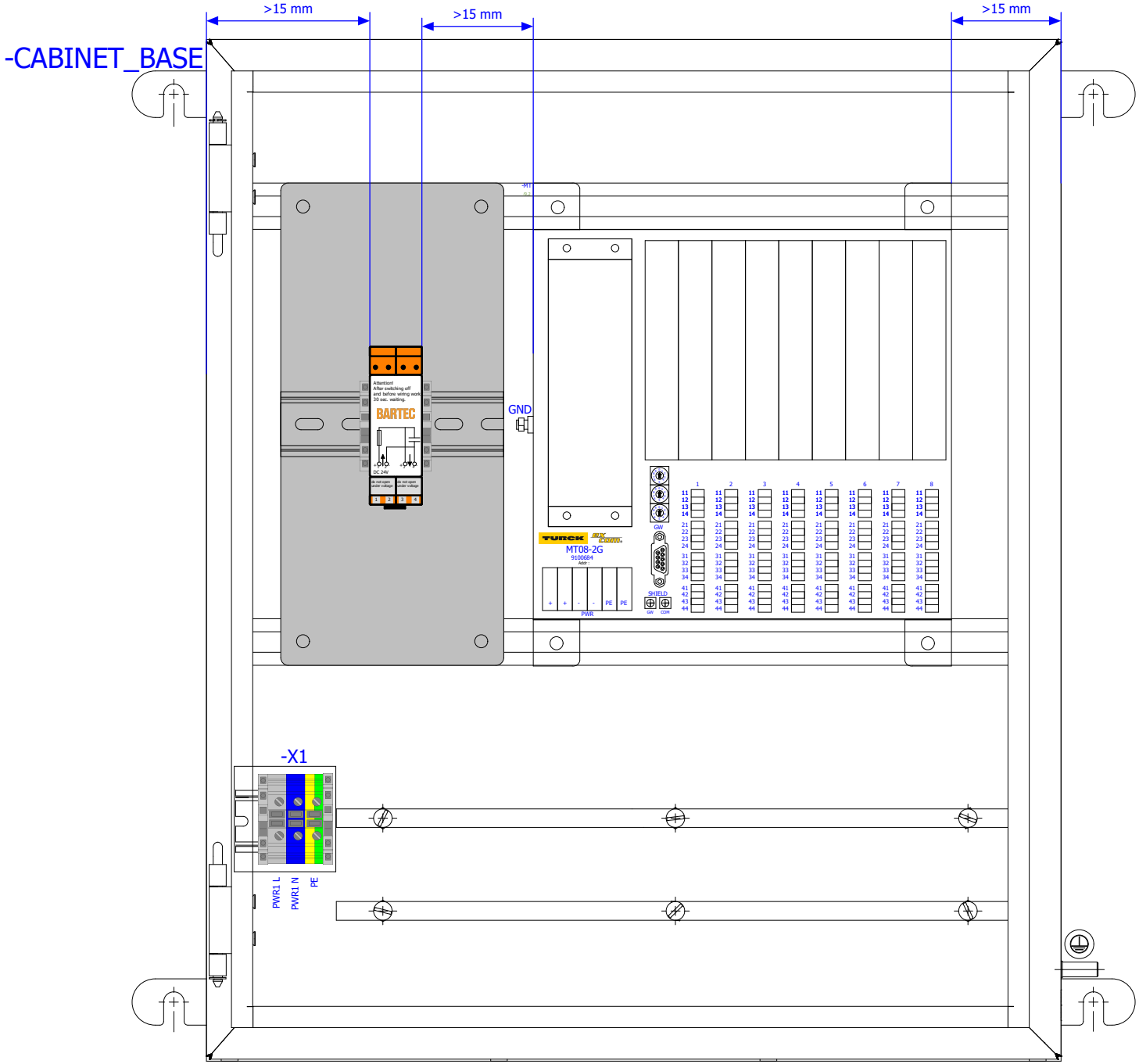

5 7

			Date	04.01.2021				GA Mounting		=	
			Ed.	Bast						+ EXCOM_RIO	
			Appr						ID 100003117; EG-VA465526/112-0100/2GD60	Page	6
Modification	Date	Name	Original		Replacement of	Replaced by				Page	9

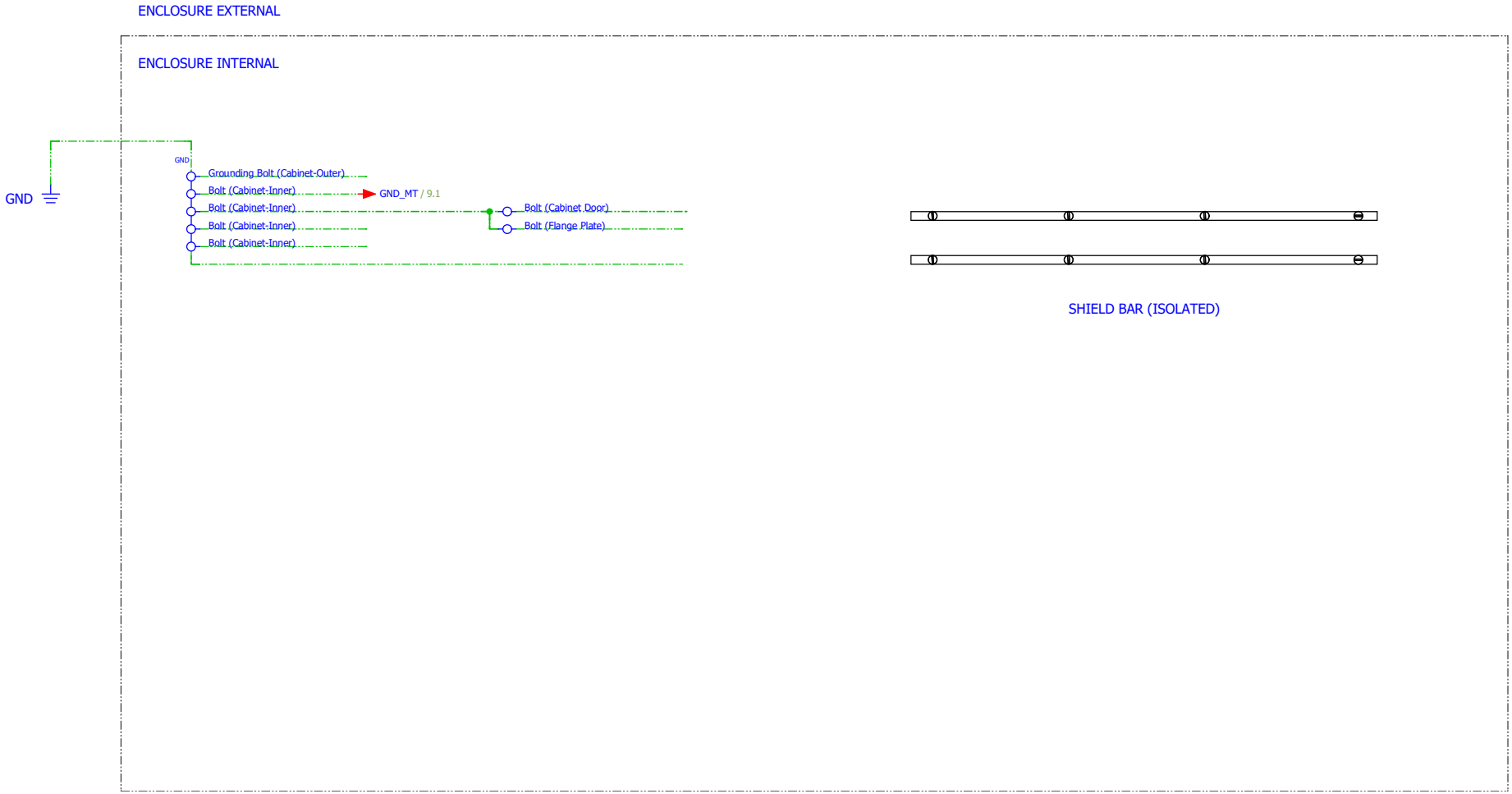

			Date	15.01.2019		
			Ed.	Claus.Vogel		
			Appr			
Modification	Date	Name	Original		Replacement of	Replaced by

TURCK

Ground Wiring

=
+ EXCOM_RIO

ID 100003117; EG-VA465526/112-0100/2GD60

Page 7
Page 9

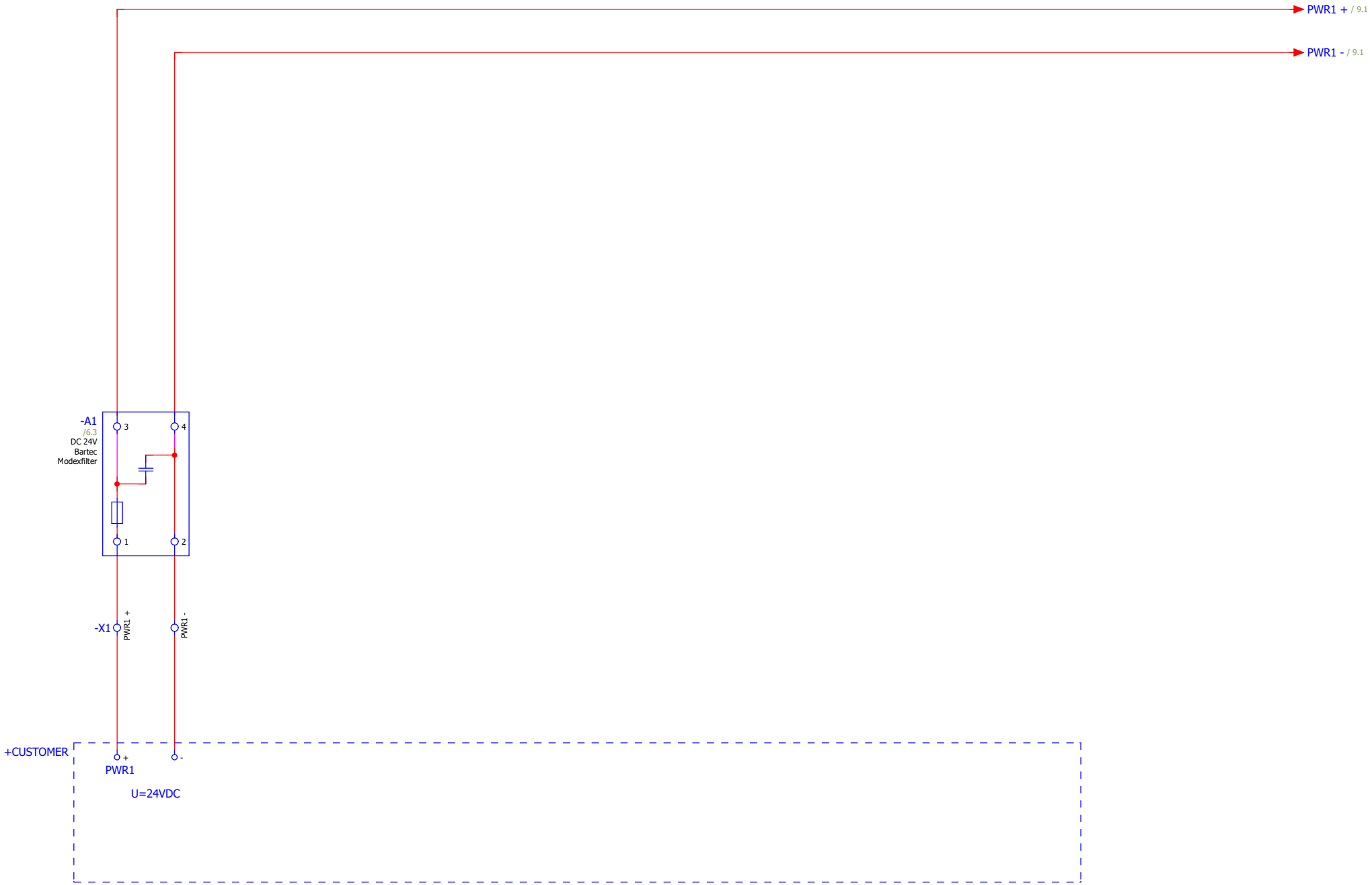

7 9

			Date	04.01.2021		
			Ed.	Bast		
			Appr			
Modification	Date	Name	Original		Replacement of	Replaced by

TURCK

Incomer Supply Distribution

=
+ EXCOM_RIO

ID 100003117; EG-VA465526/112-0100/2GD60

Page 8
Page 9

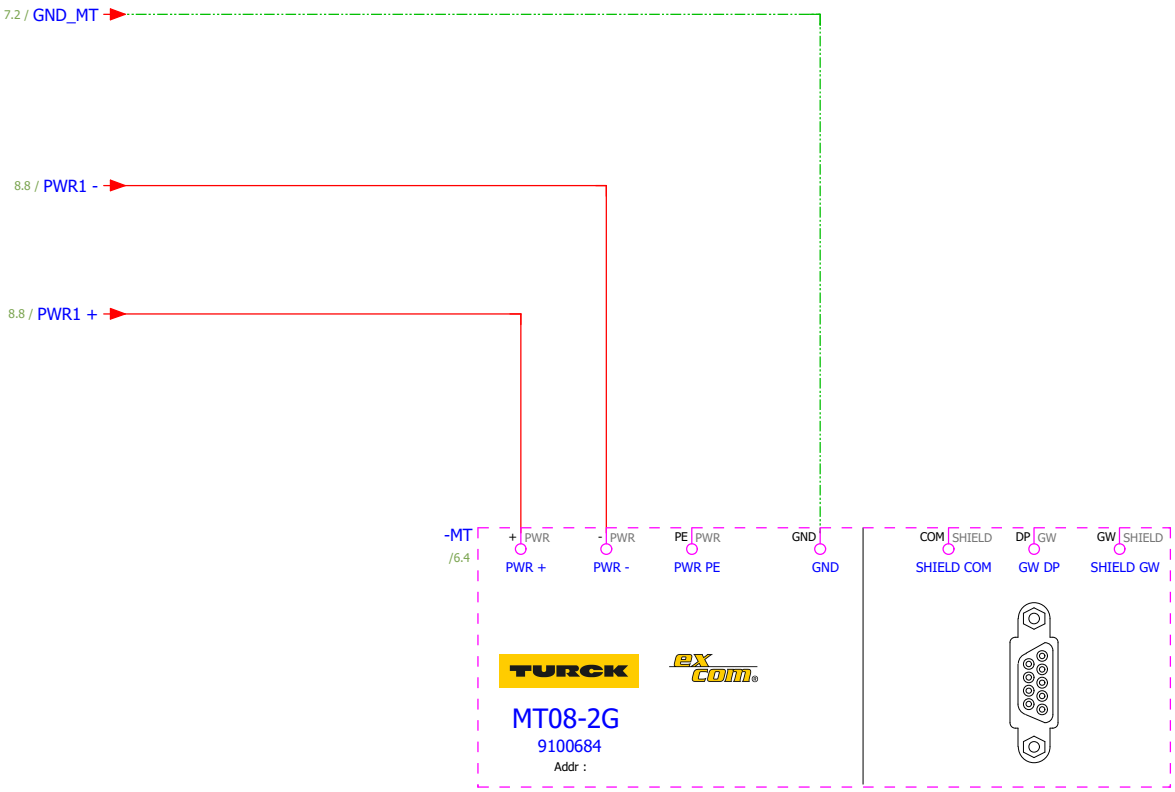

8

			Date	15.01.2019		
			Ed.	Claus.Vogel		
			Appr			
Modification	Date	Name	Original		Replacement of	Replaced by

TURCK

MT PWR Wiring

=

+ EXCOM_RIO

ID 100003117; EG-VA465526/112-0100/2GD60

Page 9

Page 9