NI50-K90SR-Y1
Inductive Sensor

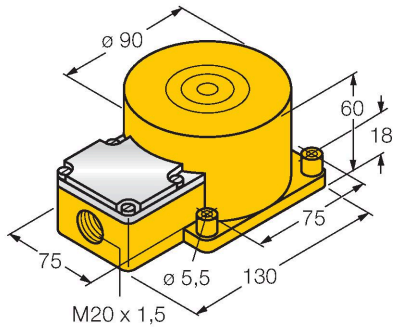

Features

- Rectangular, height 60 mm
- Plastic, PBT-GF30-V0
- DC 2-wire, nom. 8.2 VDC
- Output acc. to EN 60947-5-6 (NAMUR)
- Terminal chamber
- ATEX category II 2 G, Ex Zone 1
- ATEX category II 1 D, Ex Zone 20
- SIL 2 (Low Demand Mode) acc. to IEC 61508, PL c acc. to ISO 13849-1 at HFT0
- SIL 3 (All Demand Mode) acc. to IEC 61508, PL e acc. to ISO 13849-1 with redundant configuration HFT1

Wiring diagram

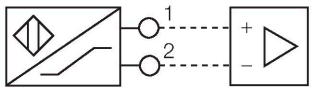

Functional principle

Inductive sensors detect metal objects contactless and wear-free. For this, they use a high-frequency electromagnetic AC field that interacts with the target. Inductive sensors generate this field via an RLC circuit with a ferrite coil.

Technical data

Type	NI50-K90SR-Y1
ID	10074
General data	
Rated switching distance	50 mm
Mounting conditions	Non-flush
Secured operating distance	≤ (0.81 × Sn) mm
Correction factors	St37 = 1; Al = 0.3; stainless steel = 0.7; Ms = 0.4
Repeat accuracy	≤ 2 % of full scale
Temperature drift	≤ ±10 %
Hysteresis	1…10 %
Electrical data	
Output function	2-wire, NAMUR
Switching frequency	0.1 kHz
Voltage	Nom. 8.2 VDC
Non-actuated current consumption	≥ 2.1 mA
Actuated current consumption	≤ 1.2 mA
Approval acc. to	KEMA 02 ATEX 1090X
Internal capacitance (C_i)/inductance (L_i)	250 nF/350 µH
Device marking	EX II 2 G Ex ia IIC T6 Gb/II 1 D Ex ia IIIC T135 °C Da
	(max. U_i = 20 V, I_i = 60 mA, P_i = 200 mW)
Warning	Avoid static charging
Mechanical data	
Design	Rectangular, K90SR
Dimensions	130 x 75 x 60 mm
Housing material	Plastic, PBT-GF30-V0
Active area material	PBT-GF30-V0

NI50-K90SR-Y1| 21-02-2025 14-39 | Technical modifications reserved

Technical data

Electrical connection	Terminal chamber
Clamping ability	≤ 2.5 mm²
Environmental conditions	
Ambient temperature	-25…+70 °C
Vibration resistance	55 Hz (1 mm)
Shock resistance	30 g (11 ms)
Protection class	IP67
MTTF	6198 years acc. to SN 29500 (Ed. 99) 40 °C

Mounting instructions

Mounting instructions/Description	
Distance D	3 x B
Distance W	3 x Sn
Distance S	1.5 x B
Distance G	6 x Sn
Distance N	2 x Sn
Distance A	1 x Sn
Distance C	2 x Sn
Width active area B	90 mm

Accessories

Dimension drawing	Type	ID	
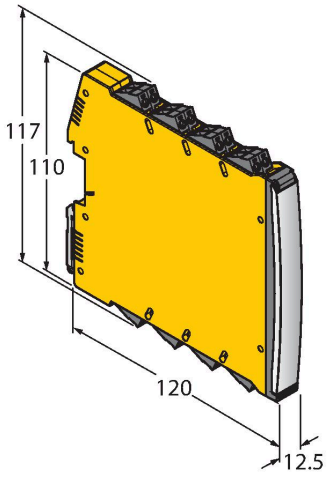	IMX12-DI01-2S-2T-0/24VDC	7580020	Isolating switching amplifier, 2-channel; SIL2 acc. to IEC 61508; Ex-proof version; 2 transistor outputs; input Namur signal; ON/OFF switchable monitoring of wire-break and short-circuit; toggle between NO/NC mode; signal doubling; removable screw terminals; 12.5 mm wide; 24 VDC power supply

NI50-K90SR-Y1| 21-02-2025 14-39 | Technical modifications reserved

Instructions for use

Intended use	This device fulfills Directive 2014/34/EC and is suited for use in areas exposed to explosion hazards according to EN 60079-0:2018 and EN 60079-11:2012.Further it is suited for use in safety-related systems, including SIL2 as per IEC 61508.In order to ensure correct operation to the intended purpose it is required to observe the national regulations and directives.
For use in explosion hazardous areas conform to classification	II 2 G and II 1 D (Group II, Category 2 G, electrical equipment for gaseous atmospheres and category 1 D, electrical equipment for dust atmospheres).
Marking (see device or technical data sheet)	Ⓔx II 2 G and Ex ia IIC T6 Gb and Ⓔx II 1 D Ex ia IIIC T135 °C Da acc. to EN 60079-0, -11
Local admissible ambient temperature	-25…+70 °C
Installation/Commissioning	These devices may only be installed, connected and operated by trained and qualified staff. Qualified staff must have knowledge of protection classes, directives and regulations concerning electrical equipment designed for use in explosion hazardous areas.Please verify that the classification and the marking on the device comply with the actual application conditions.
	This device is only suited for connection to approved Exi circuits according to EN 60079-0 and EN 60079-11. Please observe the maximum admissible electrical values.After connection to other circuits the sensor may no longer be used in Exi installations. When interconnected to (associated) electrical equipment, it is required to perform the "Proof of intrinsic safety" (EN60079-14).Attention! When used in safety systems, all content of the security manual must be observed.
Installation and mounting instructions	Avoid static charging of cables and plastic devices. Please only clean the device with a damp cloth. Do not install the device in a dust flow and avoid build-up of dust deposits on the device.If the devices and the cable could be subject to mechanical damage, they must be protected accordingly. They must also be shielded against strong electro-magnetic fields.The pin configuration and the electrical specifications can be taken from the device marking or the technical data sheet.In order to avoid contamination of the device, please remove possible blanking plugs of the cable glands or connectors only shortly before inserting the cable or opening the cable socket.
Special conditions for safe operation	avoid static charging
Service/Maintenance	Repairs are not possible. The approval expires if the device is repaired or modified by a person other than the manufacturer. The most important data from the approval are listed.

NI50-K90SR-Y1| 21-02-2025 14-39 | Technical modifications reserved