LTX200M-F10-SSI2-GAF1-X3-H1161
Pressure-Resistant Linear Position Sensor – SSI

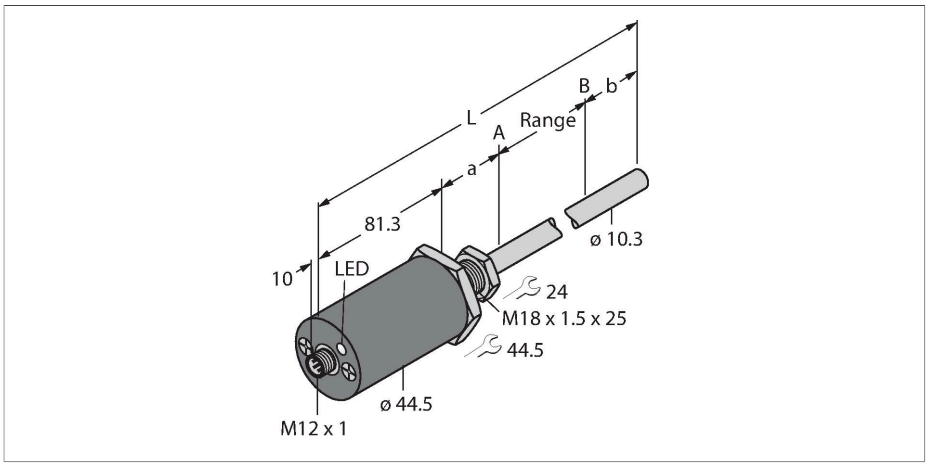

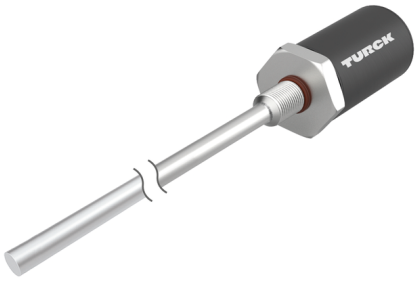

Technical data

Type	LTX200M-F10-SSI2-GAF1-X3-H1161
ID	1540221
Remark to product	Please note housing design on page 2
Measuring principle	Magnetostrictive
General data	
Measuring range	200 mm
Resolution	0.005 mm
Blind zone a	50.8 mm
Blind zone b	63.5 mm
Repeat accuracy	≤ 0.01 % of full scale
Linearity deviation	≤ 0.01 % f.s.
Hysteresis	≤ 0.025 mm
Electrical data	
Operating voltage U_B	7…30 VDC
Ripple U_{ss}	≤ 10 % U_{Bmax}
Short-circuit protection	yes/Cyclic
Wire break/reverse polarity protection	yes (voltage supply)
Communication protocol	SSi
Output function	6-pin, 25 Bit, Gray, asynchronous, Forward
Current consumption	< 60 mA at 24 VDC
Mechanical data	
Design	Rod
Dimensions	395.6 mm
Housing material	Metal, AL
Active area material	Stainless steel, 1.4404 (AISI 316L)
Electrical connection	Connector, M12 × 1

Features

- Suited for hydraulic cylinders
- The sensor is pressure resistant up to 340 bar (permanent), 680 bar (short-term)
- Shock-proof up to 100g
- Status displayed via 3 color LED
- Resolution 0,005 mm
- Operating temperature rod -40 °C…+105 °C
- Operating temperature electronics -40 °C…+85 °C
- Protection class IP68
- 7…30 V DC power supply
- SSI - output, gray coded, 25 bit
- M12 x 1 connector

Wiring diagram

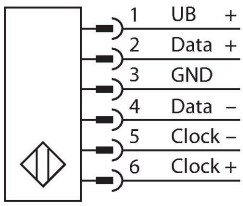

Functional principle

The LTX is a magnetostrictive sensor, optimized for precise position control in hydraulic cylinders. With the assistance of optional floats, the magnetically actuated position sensors also implement additional fill level monitoring.
The absolute value sensor is very robust and precise, and also saves the position information in the event of a voltage failure, so that additional zeroing is unnecessary. The sensors operate on the contactless function principle and are thus wear and maintenance free.

LTX200M-F10-SSI2-GAF1-X3-H1161| 25-07-2024 17-41 | Technical modifications reserved

Technical data

Environmental conditions	
Ambient temperature	-40…+85 °C
Vibration resistance	30 Hz (1 mm)
Shock resistance	100 g (11 ms)
Protection class	IP68
Measuring range display	multifunction LED

Mounting instructions

Mounting instructions/Description

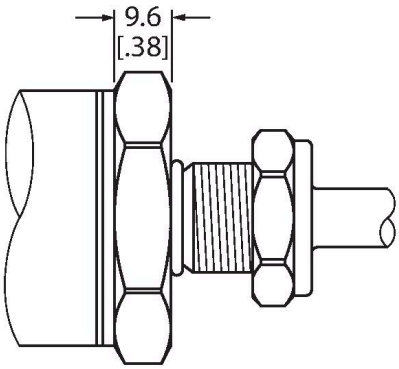

Flat Face Design

This sensor comes in flat face design (see drawing).

To fasten the sensor, the end cap of the hydraulic cylinder must have an M18 × 1.5 threaded bore according to ISO 6149-1. For more information, refer to the operating instructions.

Accessories

CM-R10 6900416

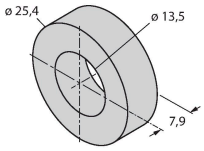

Standard positioning element, suitable for mounting in hydraulic cylinders

STM-AL-R10 6900409

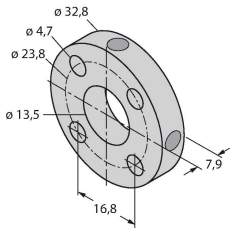

Standard 4-hole positioning element, material: Aluminum

LSPM-AL-R10 6900414

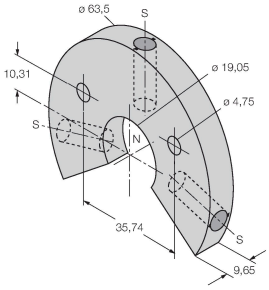

Ring-type positioning element with slot, can be used for external mounting with mounting bracket RB-R10, material: Aluminum

EF-R10 6900417

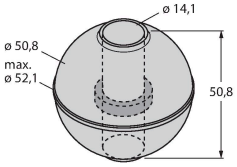

Float-type positioning element, specific weight 0.62 kg/m³, suitable for external mounting for level monitoring, material: Stainless steel

LTX200M-F10-SSI2-GAF1-X3-H1161| 25-07-2024 17-41 | Technical modifications reserved

STS-R10	6900411

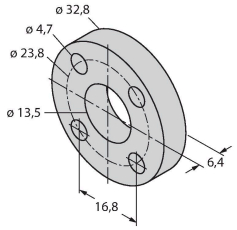

Standard spacer made of non-ferrous material for separating the positioning element from the base of the hydraulic piston rod

MB-R10	6900419

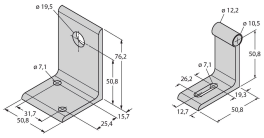

Mounting bracket for sensor head and rod, for external mounting

RB-R10	6900420

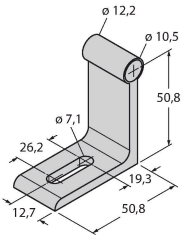

Mounting bracket for rod, for external mounting

MMB-R10	6900004

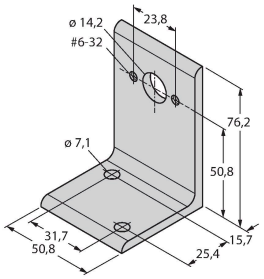

Mounting bracket for positioning element, for external mounting

Accessories

Dimension drawing	Type	ID	
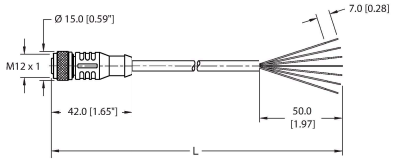	RKC 6T-2/S618	U5311-51	Connection cable, M12 female connector, straight, 6-pin, cable length: 2 m, jacket material: PVC, gray; cable with foil shield, drain wire not connected to coupling nut, other cable lengths and versions available, see www.turck.com
	RKC6T-2/TXL	6627031	Connection cable, M12 female connector, straight, 6-pin, cable length: 2 m, jacket material: PUR, black; cULus approval; other cable lengths and versions available, see www.turck.com

LTX200M-F10-SSI2-GAF1-X3-H1161| 25-07-2024 17-41 | Technical modifications reserved