BI20U-CK40-AP6X2-H1141
Inductive Sensor – With Extended Switching Distance

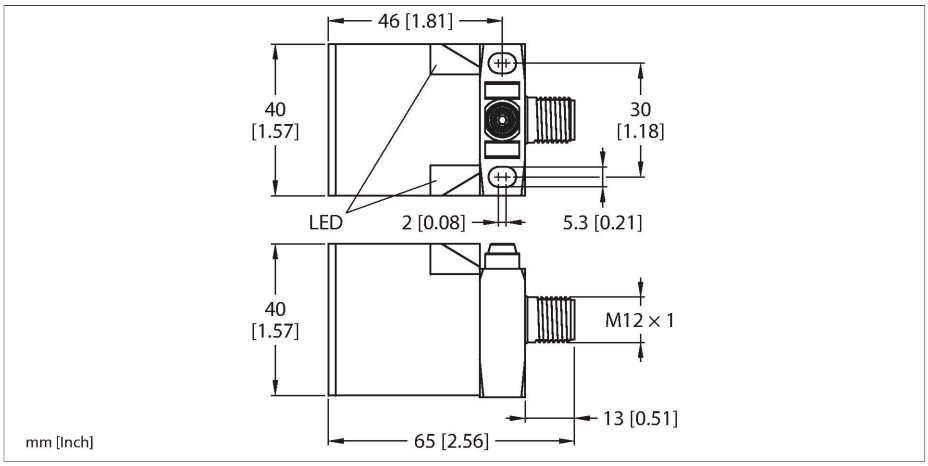

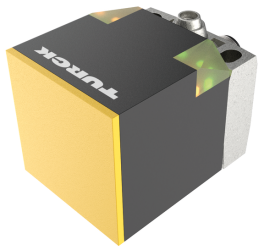

Technical data

Type	BI20U-CK40-AP6X2-H1141
ID	1627233
General data	
Rated switching distance	20 mm
Mounting conditions	Flush
Secured operating distance	≤ (0.81 × Sn) mm
Repeat accuracy	≤ 2 % of full scale
Temperature drift	≤ ±10 %
Hysteresis	3…15 %
Electrical data	
Operating voltage U_B	10…30 VDC
Ripple U_{ss}	≤ 10 % U_{Bmax}
DC rated operating current I_e	≤ 200 mA
No-load current	≤ 15 mA
Residual current	≤ 0.1 mA
Isolation test voltage	0.5 kV
Short-circuit protection	yes/Cyclic
Voltage drop at I_e	≤ 1.8 V
Wire break/reverse polarity protection	yes/Complete
Output function	3-wire, NO contact, PNP
DC field stability	300 mT
AC field stability	300 mT_{ss}
Insulation class	⧈
Switching frequency	0.25 kHz
Mechanical data	
Design	Rectangular, CK40
Dimensions	65 x 40 x 40 mm

Features

- Rectangular, height 40 mm
- Variable orientation of active face in 5 directions
- Plastic, PBT-GF30-V0
- High luminance corner LEDs
- Optimum view on supply voltage and switching state from any position
- Factor 1 for all metals
- Protection class IP68
- Resistant to magnetic fields
- Large coverage
- High switching frequency
- DC 3-wire, 10…30 VDC
- NO contact, PNP output
- M12 x 1 male connector

Wiring diagram

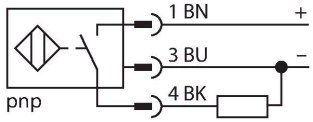

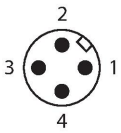

Functional principle

Inductive sensors are designed for wear-free and contactless detection of metal objects. uprox+ sensors have significant advantages due to their patented multi-coil system. They excel thanks to their optimum switching distances, maximum flexibility and operational reliability as well as efficient standardization.

BI20U-CK40-AP6X2-H1141| 25-07-2024 17-07 | Technical modifications reserved

Technical data

	variable orientation of active face in 5 directions
Housing material	Plastic, PBT-GF20-V0, Black
Active area material	Plastic, PA12-GF30, yellow
Electrical connection	Connector, M12 × 1
Environmental conditions	
Ambient temperature	-30…+85 °C
Vibration resistance	55 Hz (1 mm)
Shock resistance	30 g (11 ms)
Protection class	IP68
MTTF	874 years acc. to SN 29500 (Ed. 99) 40 °C
Power-on indication	2 × LEDs, Green
Switching state	2 × LEDs, Yellow
Included in delivery	BS1-CK40

Mounting instructions

Mounting instructions/Description

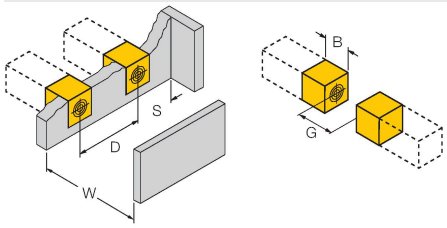

Distance D	80 mm
Distance W	60 mm
Distance S	40 mm
Distance G	120 mm
Width active area B	40 mm

Accessories

BSS-CP40	6901318

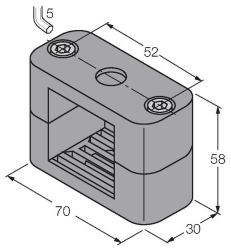

Mounting clamp for rectangular housings 40 x 40 mm; material: Polypropylene

BI20U-CK40-AP6X2-H1141| 25-07-2024 17-07 | Technical modifications reserved

Accessories

Dimension drawing	Type	ID	
	RKC4T-2/TEL	6625010	Connection cable, M12 female connector, straight, 3-pin, cable length: 2 m, jacket material: PVC, black; cULus approval

BI20U-CK40-AP6X2-H1141| 25-07-2024 17-07 | Technical modifications reserved