BL20 electronic module
4 Digital Outputs, PNP, 0.5 A
BL20-4DO-24VDC-0.5A-P

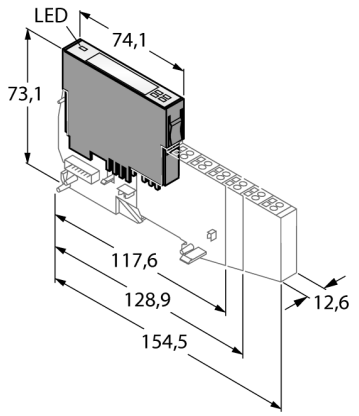

- Fieldbus and connection technology independent
- Protection class IP20
- LEDs indicate status and diagnostic
- Electronics galvanically separated from the field level via optocouplers
- 4 digital outputs, 24 VDC
- Max. 0.5 A
- P switching

Functional principle

BL20 electronic modules are plugged into the purely passive base modules which are used for connection of field devices. Maintenance is significantly facilitated due to separation of the connection level from the module electronics. Furthermore flexibility is enhanced because the base modules provide a choice of tension spring or screw connection technology.

The electronic modules are completely independent of the type of higher level field bus through the use of gateways.

Type	BL20-4DO-24VDC-0.5A-P
ID	6827023

Number of channels	4
Rated voltage from the supply terminal	24 VDC
Nominal current from field supply	≤ 25 mA
Nominal current from module bus	≤ 30 mA
Power dissipation, typical	≤ 1 W

Output connectivity	Screw, tension spring

Outputs	
Output type	PNP
Output voltage	24 VDC
Output current per channel	0.5 A
Output delay	0.25 ms
Load type	resistive, inductive, lamp load
Load resistance, resistive	> 48 Ω
Load resistance, inductive	< 1.2 H
Lamp load	< 6 W
Switching frequency, resistive	< 5000 Hz
Switching frequency, inductive	< 2 Hz
Switching frequency, lamp load	< 10 Hz
Short-circuit protection	yes
Simultaneity factor	1
Electrical isolation	electronics for the field level

Number of diagnostic bits	1

Edition • 2024-10-02T19:54:34+02:00

Dimensions (W x L x H)	12.6 x 74.1 x 55.4 mm
Approvals	CE, cULus, zone 2, Class I, Div. 2
Ambient temperature	0…+55 °C
Storage temperature	-25…+85 °C
Relative humidity	15…95 %, no condensation allowed
Vibration test	Acc. to EN 61131
Shock test	Acc. to IEC 60068-2-27
Drop and topple	Acc. to IEC 60068-2-31
Electromagnetic compatibility	Acc. to EN 61131-2
Protection class	IP20
MTTF	1237 years acc. to SN 29500 (Ed. 99) 20 °C

Edition • 2024-10-02T19:54:34+02:00

Compatible base modules

Dimension drawing	Type	Pin configuration
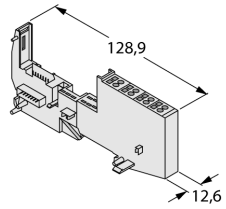	**BL20-S4T-SBCS** 6827063 Tension spring connection, access to C rail **BL20-S4S-SBCS** 6827060 Screw connection, access to C rail	Wiring Diagram 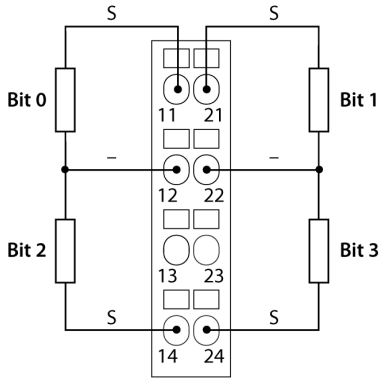
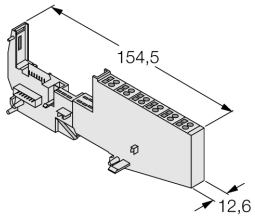	**BL20-S6T-SBCSBC** 6827064 Tension spring connection, access to C rail **BL20-S6S-SBCSBC** 6827066 Screw connection, access to C rail	Wiring Diagram 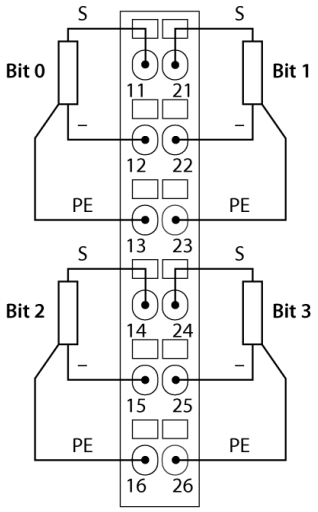

Edition • 2024-10-02T19:54:34+02:00

Accessories
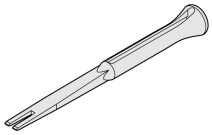
Type code	Ident no.		Dimension drawing
ZBW5-2BETÄTIGUNGSWERKZEUG	6827126	Tension spring tool