PT10R-2008-U1-DA91
Pressure Transmitter – With Voltage Output (3-Wire)

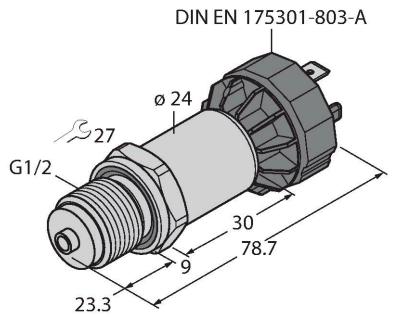

Features

- Fully welded metal measuring cell
- Pressure range 0…10 bar rel.
- 12…33 VDC
- Analog output 0…10 V
- Process connection G1/2" male thread, back sealing and manometer (combi)
- Connector device, DIN EN 175301-803-A

Wiring diagram

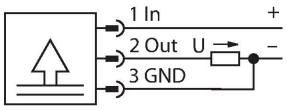

Technical data

Type	PT10R-2008-U1-DA91
ID	6836292
Pressure type	Relative pressure
Pressure range	0…10 bar
	0…145.04 psi
	0…1 MPa
Admissible overpressure	≤ 30 bar
Burst pressure	≥ 60 bar
Response time	< 2 ms, typ. 1 ms
Long-term stability	0.25 % FS, according to IEC EN 60770-1
Power supply	
Operating voltage U_B	12…33 VDC
Current consumption	≤ 7 mA
Short-circuit/reverse polarity protection	yes / yes
Protection class	IP65
Insulation class	III
Insulation voltage	750 VDC
Outputs	
Output 1	Analog output
Output function	Analog output voltage
Analog output	
Voltage output	0…10 V
Load	≤ 100 nF/> 10 kΩ
Resolution	<± 0.1 % FS
Accuracy LHR	±0.3 % FS (typical; max. ±0.5 % FS)

Functional principle

The pressure sensors in the PT…-2000 product series operate with a fully welded metal measuring cell in various pressure ranges of up to -1…1000 bar in 2-, 3- or even 4-wire technology. Depending on the sensor variant, the processed signal is available as an analog output signal (4…20 mA, 0…10 V, 0…5 V, 1…6 V, ratiometric) or as a digital IO-Link process parameter. The IO-Link sensor variants also have two independently configurable switching outputs.
In addition to the standard variants, there are special sensors for uses such as ATEX areas or for oxygen applications.
A wide range of process connections and electrical connections offer a high degree of flexibility in a wide range of applications.

PT10R-2008-U1-DA91| 22-02-2025 12-09 | Technical modifications reserved

Technical data

Temperature behaviour	
Medium temperature	-40…+135 °C
Temperature coefficient	± 0.2 % of full scale/10 K
Environmental conditions	
Ambient temperature	-30…+85 °C
Storage temperature	-50…+100 °C
Vibration resistance	20 g, 15…2000 Hz, 15…25 Hz with amplitude ± 15 mm, 1 octave/minute in all 3 directions, 50 continuous loads, acc. to IEC 68-2-6
Shock resistance	100 g, 11 ms, half sinusoidal curve, all 6 directions, free fall from 1 m onto concrete (6x) acc. to IEC 68-2-27
Mechanical data	
Housing material	Stainless-steel/Plastic, 1.4404 (AISI 316L)/polyarylamide 50 % GF UL 94 V-0
Pressure connection material	Stainless steel 1.4404 (AISI 316L)
Material pressure transducer	Stainless steel 1.4016 (AISI 430)
Process connection	G 1/2" male thread, rear sealing and manometer (combi)
Wrench size pressure connection / coupling nut	27
Electrical connection	Connector, DIN EN 175301-803 Form A
Max. tightening torque of housing nut	30 Nm
Reference conditions acc. to IEC 61298-1	
Temperature	15…+25 °C
Atmospheric pressure	860…1060 hPa abs.
Humidity	45…75 % rel.
Auxiliary power	24 VDC
Tests/approvals	
Approvals	cULus
UL registration number	E302799
MTTF	1238 years acc. to SN 29500 (Ed. 99) 40 °C
Included in delivery	FKM special profile seal (1x)

PT10R-2008-U1-DA91| 22-02-2025 12-09 | Technical modifications reserved

Accessories

Dimension drawing	Type	ID	
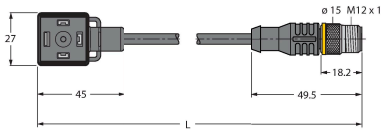	VAS04-K81E-0.6-RSC5T/TXL	6606726	Extension cable, valve connector, A type to M12 male connector, straight, 5-pin; cable length: 0.6 m, jacket material: PUR, black

PT10R-2008-U1-DA91| 22-02-2025 12-09 | Technical modifications reserved